版次 REV.	修訂 REVISIONS 記述 DESCRIPTION	日期 DATE

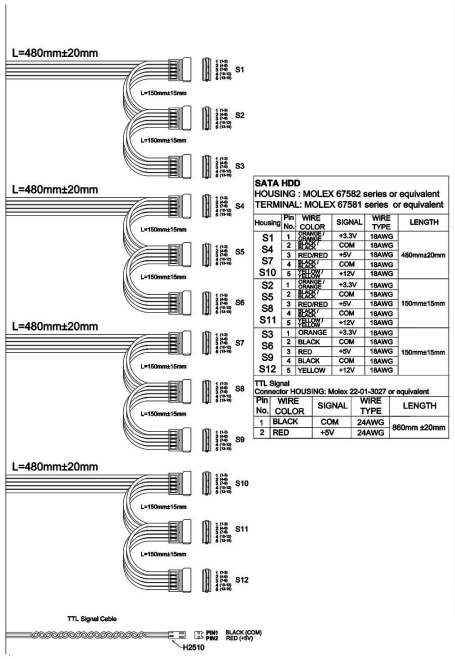

SATA HDD
HOUSING : MOLEX 67582 series or equivalent
TERMINAL: MOLEX 67581 series or equivalent

Housing	Pin No.	WIRE COLOR	SIGNAL	WIRE TYPE	LENGTH
S1 S4 S7 S10	1	ORANGE / ORANGE	+3.3V	18AWG	480mm±20mm
	2	BLACK	COM	18AWG	
	3	RED/RED	+5V	18AWG	
	4	BLACK / BLACK	COM	18AWG	
	5	YELLOW / YELLOW	+12V	18AWG	
S2 S5 S8 S11	1	ORANGE / ORANGE	+3.3V	18AWG	150mm±15mm
	2	BLACK	COM	18AWG	
	3	RED/RED	+5V	18AWG	
	4	BLACK / BLACK	COM	18AWG	
	5	YELLOW / YELLOW	+12V	18AWG	
S3 S6 S9 S12	1	ORANGE	+3.3V	18AWG	150mm±15mm
	2	BLACK	COM	18AWG	
	3	RED	+5V	18AWG	
	4	BLACK	COM	18AWG	
	5	YELLOW	+12V	18AWG	

TTL Signal
Connector HOUSING: Molex 22-01-3027 or equivalent

Pin No.	WIRE COLOR	SIGNAL	WIRE TYPE	LENGTH
1	BLACK	COM	24AWG	860mm ±20mm
2	RED	+5V	24AWG	

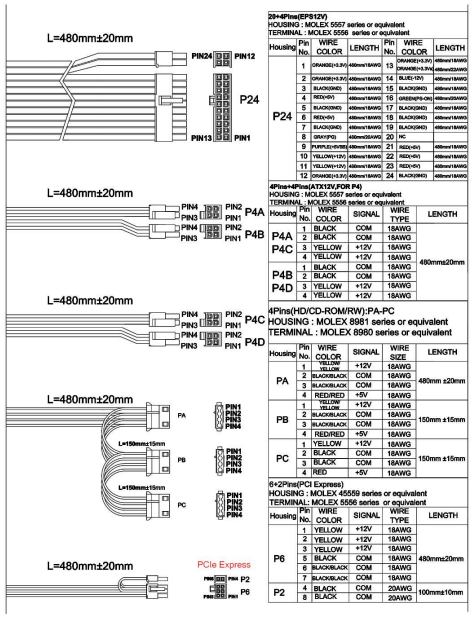

20+4Pins(EPS12V)
HOUSING : MOLEX 5557 series or equivalent
TERMINAL : MOLEX 5556 series or equivalent

Housing	Pin No.	WIRE COLOR	LENGTH	Pin No.	WIRE COLOR	LENGTH
P24	1	ORANGE(+3.3V)	480mm/18AWG	13	ORANGE(+3.3V)	480mm/18AWG
					ORANGE(+3.3V)	480mm/22AWG
	2	ORANGE(+3.3V)	480mm/18AWG	14	BLUE(-12V)	480mm/18AWG
	3	BLACK(GND)	480mm/18AWG	15	BLACK(GND)	480mm/18AWG
	4	RED(+5V)	480mm/18AWG	16	GREEN(PS-ON)	480mm/22AWG
	5	BLACK(GND)	480mm/18AWG	17	BLACK(GND)	480mm/18AWG
	6	RED(+5V)	480mm/18AWG	18	BLACK(GND)	480mm/18AWG
	7	BLACK(GND)	480mm/18AWG	19	BLACK(GND)	480mm/18AWG
	8	GRAY(PG)	480mm/20AWG	20	NC	
	9	PURPLE(+5VSB)	480mm/18AWG	21	RED(+5V)	480mm/18AWG
	10	YELLOW(+12V)	480mm/18AWG	22	RED(+5V)	480mm/18AWG
	11	YELLOW(+12V)	480mm/18AWG	23	RED(+5V)	480mm/18AWG
	12	ORANGE(+3.3V)	480mm/18AWG	24	BLACK(GND)	480mm/18AWG

4Pins+4Pins(ATX12V,FOR P4)
HOUSING : MOLEX 5557 series or equivalent
TERMINAL : MOLEX 5556 series or equivalent

Housing	Pin No.	WIRE COLOR	SIGNAL	WIRE TYPE	LENGTH
P4A P4C	1	BLACK	COM	18AWG	480mm±20mm
	2	BLACK	COM	18AWG	
	3	YELLOW	+12V	18AWG	
	4	YELLOW	+12V	18AWG	
P4B P4D	1	BLACK	COM	18AWG	
	2	BLACK	COM	18AWG	
	3	YELLOW	+12V	18AWG	
	4	YELLOW	+12V	18AWG	

4Pins(HD/CD-ROM/RW):PA-PC
HOUSING : MOLEX 8981 series or equivalent
TERMINAL : MOLEX 8980 series or equivalent

Housing	Pin No.	WIRE COLOR	SIGNAL	WIRE SIZE	LENGTH
PA	1	YELLOW / YELLOW	+12V	18AWG	480mm ±20mm
	2	BLACK/BLACK	COM	18AWG	
	3	BLACK/BLACK	COM	18AWG	
	4	RED/RED	+5V	18AWG	
PB	1	YELLOW / YELLOW	+12V	18AWG	150mm ±15mm
	2	BLACK/BLACK	COM	18AWG	
	3	BLACK/BLACK	COM	18AWG	
	4	RED/RED	+5V	18AWG	
PC	1	YELLOW	+12V	18AWG	150mm ±15mm
	2	BLACK	COM	18AWG	
	3	BLACK	COM	18AWG	
	4	RED	+5V	18AWG	

6+2Pins(PCI Express)
HOUSING : MOLEX 45559 series or equivalent
TERMINAL: MOLEX 5556 series or equivalent

Housing	Pin No.	WIRE COLOR	SIGNAL	WIRE TYPE	LENGTH
P6	1	YELLOW	+12V	18AWG	480mm±20mm
	2	YELLOW	+12V	18AWG	
	3	YELLOW	+12V	18AWG	
	5	BLACK	COM	18AWG	
	6	BLACK/BLACK	COM	18AWG	
	7	BLACK/BLACK	COM	18AWG	
P2	4	BLACK	COM	20AWG	100mm±10mm
	8	BLACK	COM	20AWG	

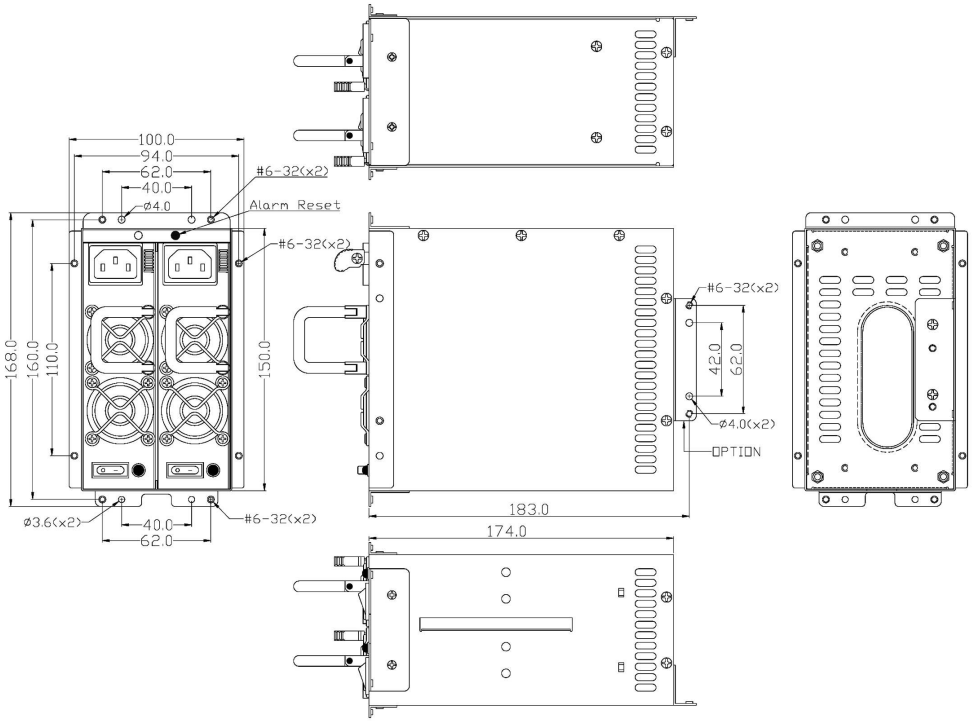

R4S-400G1V2 (400W)
R4S-500G1V2 (500W)

容許公差: TOLERANCES: .XXX ±.025 .XX ±.100 .X ±.250	材料規格: MATERIAL: UL, TUV, CB, CE, FCC, BSMI, CCC, EN62368		品名: MODEL NO: PS2 400W 500W Mini-Redundant power supply with PFC
	核准者: APPROVE BY: Robert Roan	日期: DATE: December 15, 2021	料號: PART NO: R4S-400G1V2 R4S-500G1V2
投影法: PROJECTION: 第三角法	審核者: CHECK BY: Jun Chen	日期: DATE: December 15, 2021	圖號: DRAW NO: R4B-010(S) / 檔號: FILE NO: R4B-010_v20211215
	繪圖者: DRAW BY: Jack Wu	日期: DATE: December 15, 2021	單位: UNITS: mm / 版次: REV. NO: 1.1 / 規格: SPEC.: / 編號: SHEET: OF

Genesys Group® 台灣工控有限公司 genesysgroup.com.tw